CAMERICH

SPECS

UNITY L/ **TOP:** Available in Graphite oak veneer and white/grey ceramic COMBO. **FRAME:** Support base is constructed with solid Ash Wood and finished in Grey Oak. Base is produced with MDF and plywood reinforcements, upholstered in Black Eco Leather, (FC-11). Lazy Susan on Unity Tables C05B0804 and C05B0805 come with an electric lift capability for easy cleaning purposes.

C05B0804

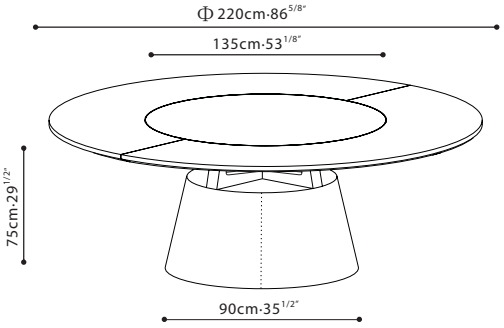

C05B0805

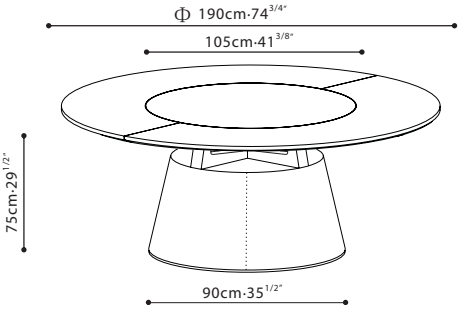

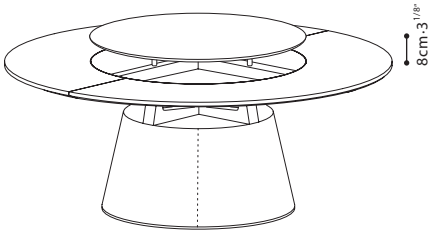

Lift mechanism schematic

*Unity C05B0804/05 comes with a remote-controlled lift mechanism which allows the Lazy Susan to be lifted mechanically for easy cleaning. The cord is detachable, 3 meters long. 2*AAA battery is required for the handheld remote which controls the lift mechanism. A US adaptor is required and not included. (Input voltage is 110-240V, which means a voltage convertor is not required for standard US outlets)

TOP:

Graphite Oak

White Ceramic

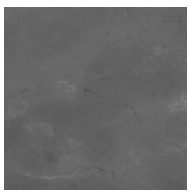

Grey Ceramic

BASE:

FC-11

Copyright © Camerich USA 2022- all rights reserved

UNITY L SIMPLE/ **TOP:** Available in Grey Oak or Black Walnut veneer. **FRAME:** Support base is constructed with solid Ash Wood. Base is produced with MDF and plywood reinforcements, upholstered in Black Eco Leather, (FC-11).

CF5B0804

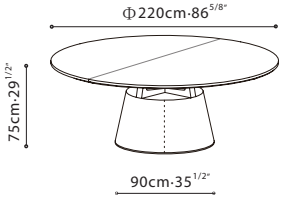

Base in FC-11 Eco-leather

CF5B0805

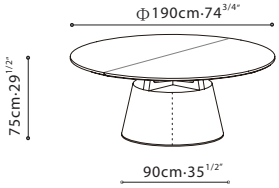

Base in FC-11 Eco-leather

TOP:

Grey Oak

Black Walnut

BASE:

FC-11

Copyright © Camerich USA 2022 - all rights reserved

UNITY S/ **TOP:** Available in Grey Oak, Carrara Marble or Galaxy Grey Marble. **FRAME:** Support base is constructed with solid Ash Wood and finished in Grey Oak. Base is produced with MDF and plywood reinforcements, upholstered in Eco Leather, (FC-11 or FC-08). **LAZY SUSAN:** Optional Lazy Susan, B50B0807, is finished in Grey Oak, and is available for Unity Table C05B0803 and C05B0806.

C05B0803

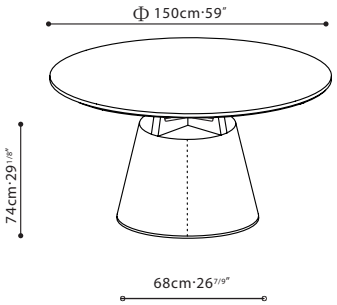

C05B0806

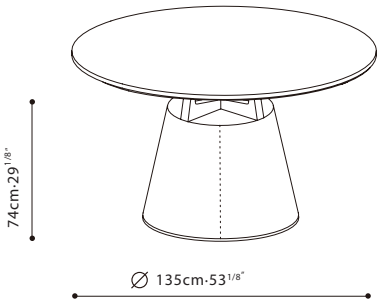

B50B0807

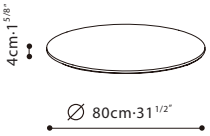

*Suitable for C05B0803 Only

TOP:

Grey Oak

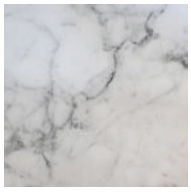
Carerra Marble

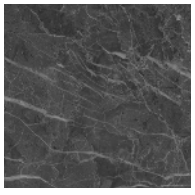
Galaxy Grey Marble

BASE:

FC-11

FC-08

*Natural marble pattern may vary.

Copyright © Camerich USA 2022 - all rights reserved